Controller and LEDs

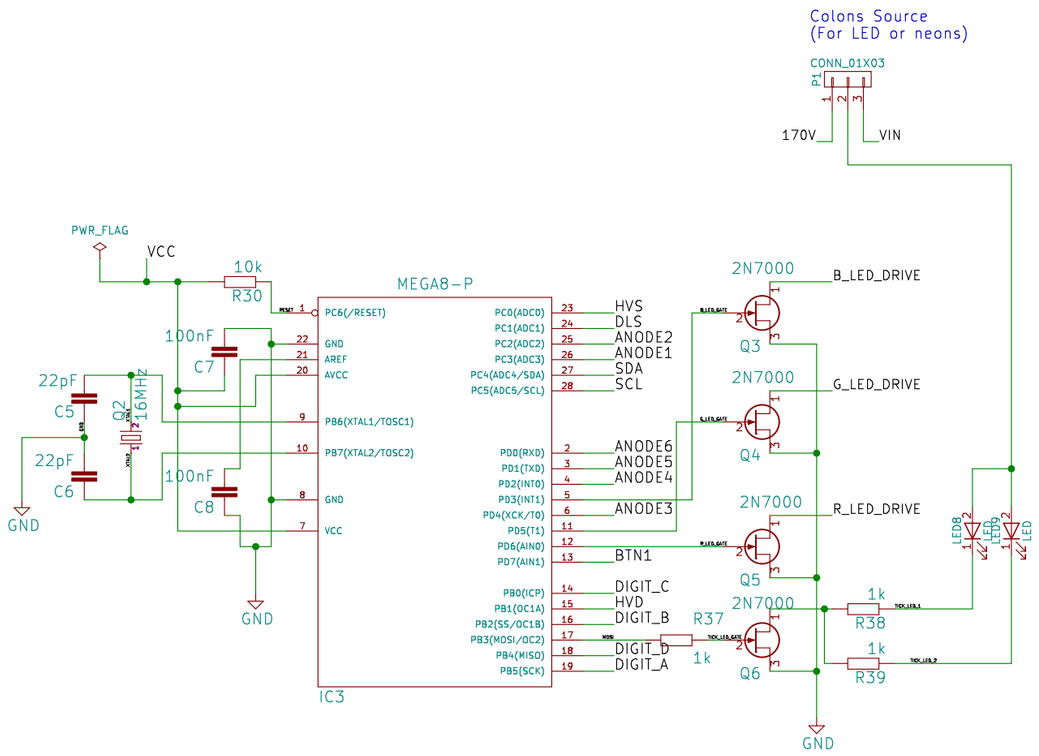

RGB back lights

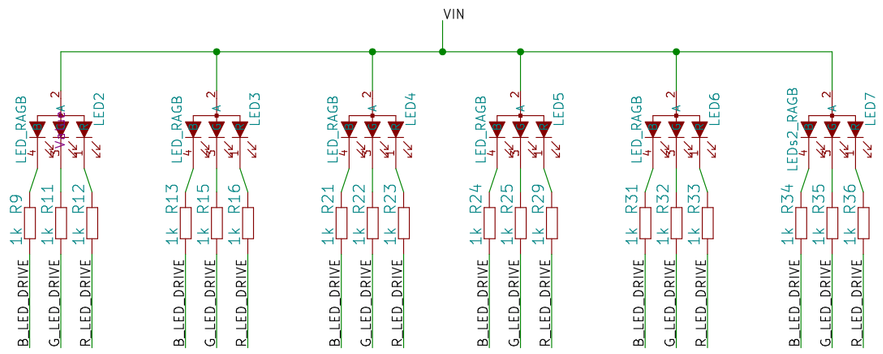

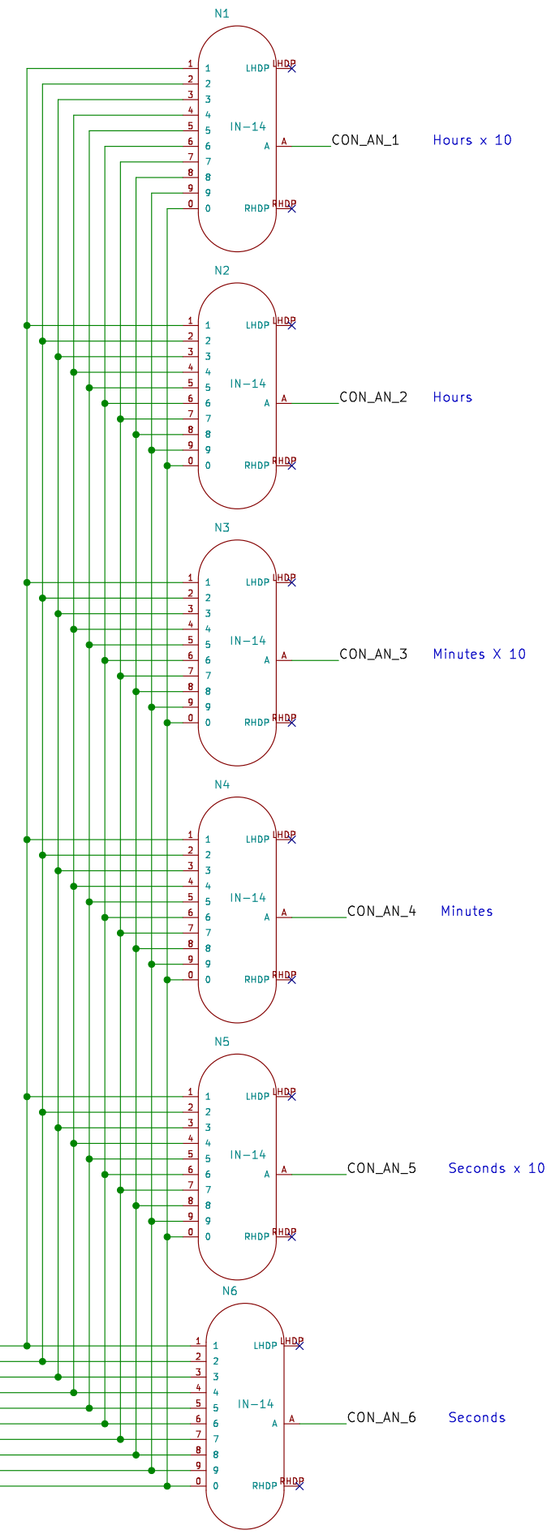

Anode Control

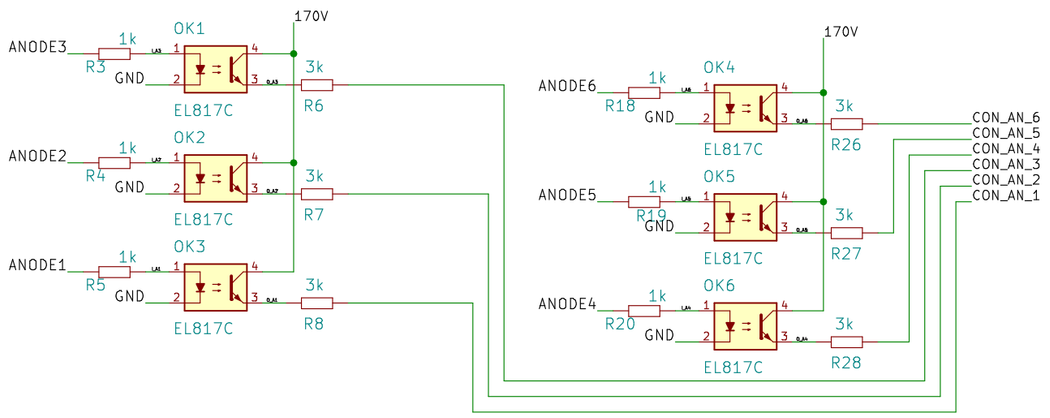

Copyright 2016-2019
Ian Sparkes
This is NOT public domain

Digit control

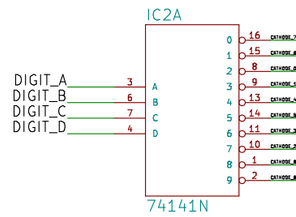

Cathode Control and Tubes

Power regulator

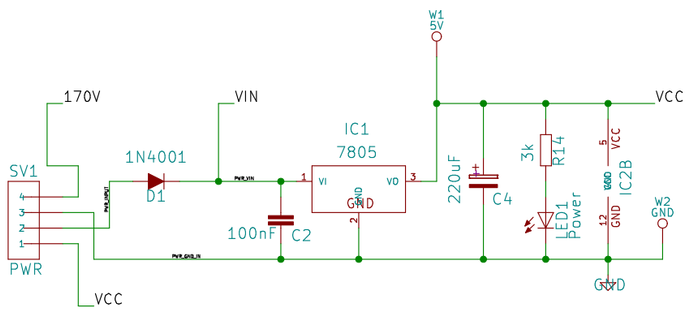

Boost Circuit

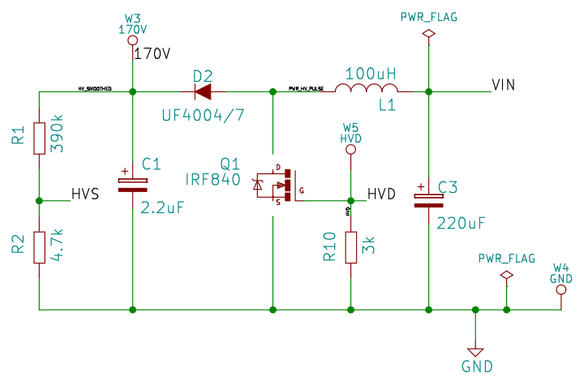

ESP8266 Regulator and I2C level shifter

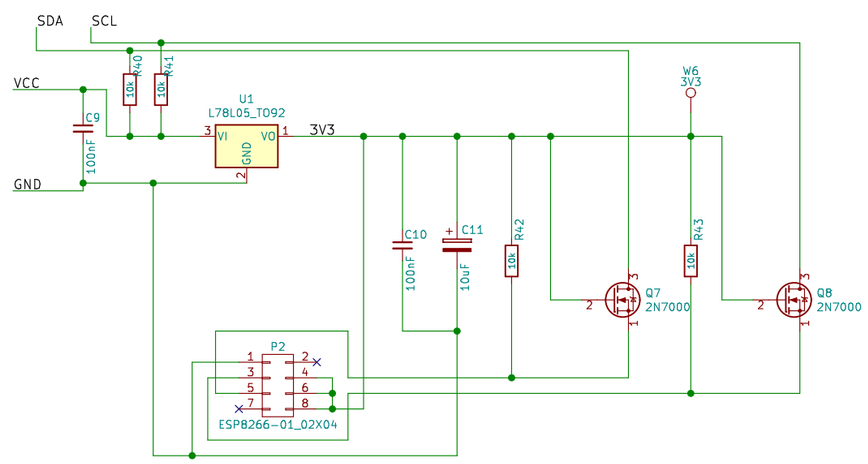

Connectors

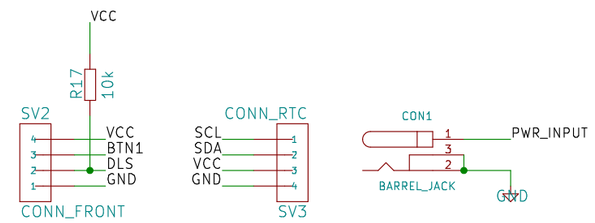

NOT public domain
Subject to license
Ian Sparkes
Copyright 2016-2019

Ian Sparkes Nixie Clocks

Sheet: /
File: AllInOneIN142.sch

Title: All-In-One Nixie Clock

Size: A2	Date: 2019-04-23	Rev: Rev 004
KiCad E.D.A. kicad 5.0.2-bee76a070ubuntu18.04.1		Id: 1/1