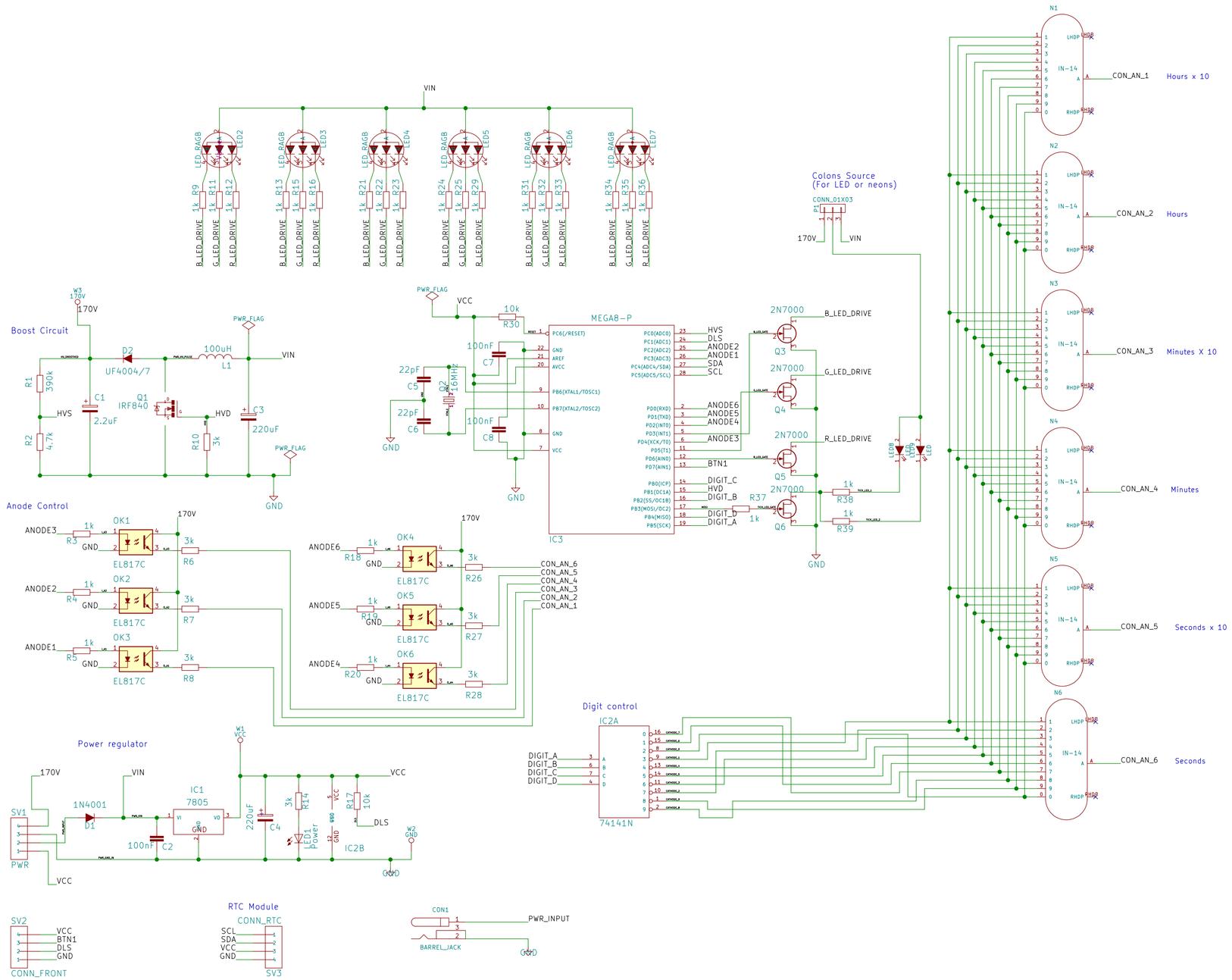


| | |
|---|---|
| Ian's Nixie Clocks | |
| Sheet: / | |
| File: KickstarterNixie.sch | |
| **Title: Arduino Nixie Clock Module with IN-14** | |
| Size: A2 Date: 2016-07-01 | Rev: Rev 002 |
| KiCad E.D.A. kicad 4.0.4+e1-6308~48~ubuntu14.04.1-stable | Id: 1/1 |